modul-port

THE ITD SUPPORT EXTRUSION – AN IDEAL BASIS FOR LONG-RANGE REQUIREMENTS

Materials / quality

- High-quality materials (aluminium / aluminium cast / steel) and precise manufacturing guarantee reliable applications over a long timeframe
- Strict safety and quality inspection ensure optimum operational dependability

Cover strips

- Available in various dimensions for enclosing inactive profile areas
- Facilitate virtually invisible cabling and can easily be wiped clean for optimum hygiene

Electrification

- Variable integration of all conventional national and international socket strips; middle shafts of the support columns enable a power connection where required
- The space-saving connection box for connecting electric circuits is conveniently situated in the middle shaft of the support profile

Support extrusion

- The support extrusion is available as “Economy” or “Profi” version (to accept electric components, e.g. socket strips) as well as a flat solution
- The flexible system design and range of sizes can be tailor-made to accommodate virtually all of your requirements
- Universal use guaranteed by various installation options, for example on the wall or on standard runners
- The option for continual adjustments or addition of new components ensure optimum future viability
- Two T-slots with thread plates (grid 32 mm) on the front of the profile can accommodate system components and accessories including shelves, drawers, keyboard holders or standard runners

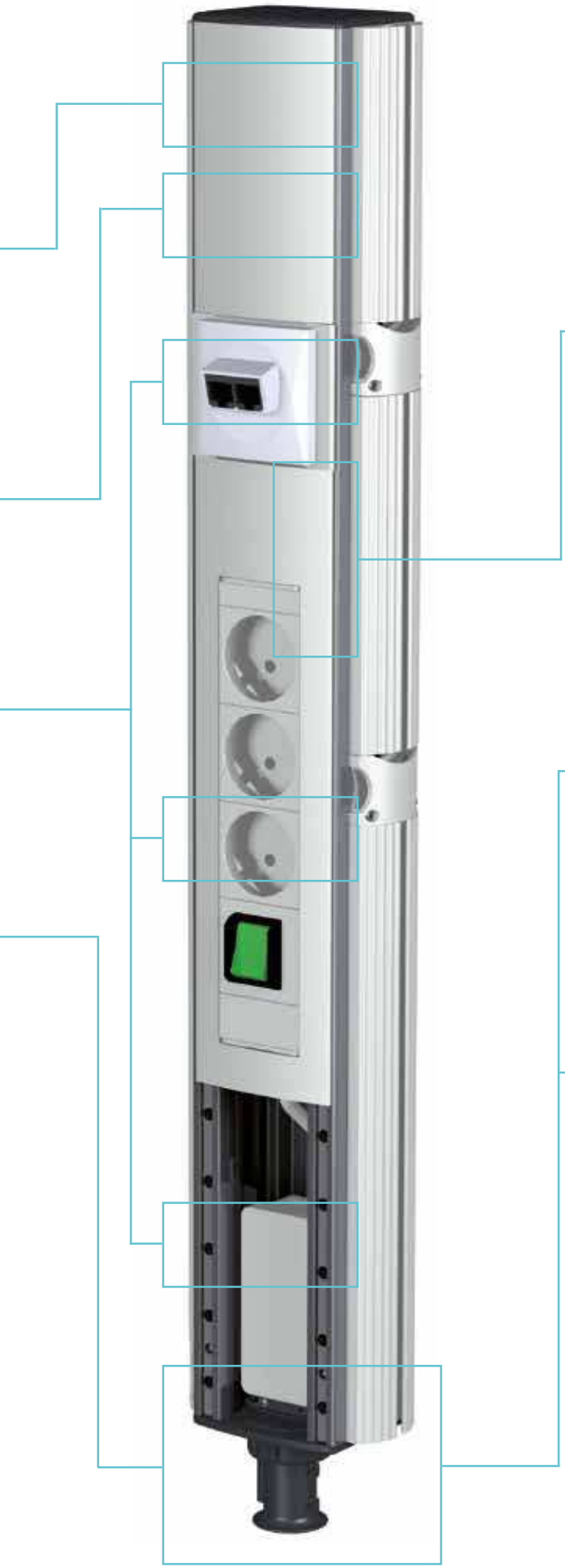

Hygiene

- Smooth surface moulding is easily wiped clean
- Small gaps prevent germ formation

Cross section: the ITD support extrusion

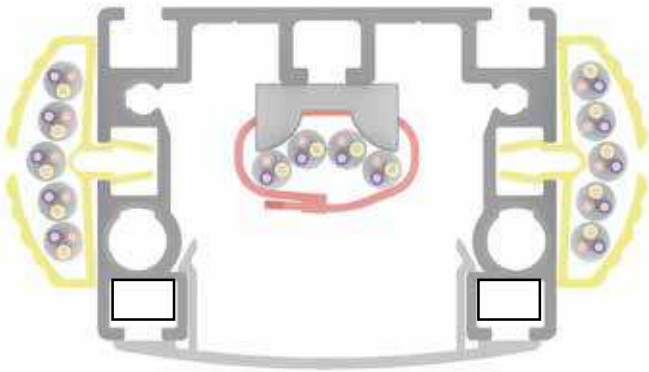

Cable management

- The support column allows clean and concealed cable routing for the outgoing cable and spare cables
- Horizontally mounted cable channels offer an additional placement option as well as separate data lines and network connections
- Cabling continues out of the support profile along the underside of any support arm, allowing cabling to directed by its own cable channel to the appropriate device
- Integrated strain reliefs protect the cable from becoming unplugged

ITD SUPPORT EXTRUSION

ITD support extrusions “Economy” and “Profi”

Features support extrusion:

- The ITD support extrusion is available in two versions: “Economy” and “Profi”
- Accomodates support arms and various accessories as well as socket strips and data lines

Installation: On the wall or horizontal standard runner (with mounting kit, see page 78)

Finish: Support extrusion: aluminium, natural anodized, Cable duct: RAL 7035 light grey, caps (top and bottom): RAL 7016 anthracite

Scope of delivery:

1 The support extrusion “Economy”: 1 support extrusion with 2 tapped strips, mounting grid 32 mm in both front T-slots, 2 caps (top and bottom), including mounting hardware

2 The support extrusion “Profi”: 1 support extrusion with 2 tapped strips, mounting grid 32 mm in both front T-slots, 1 cap, 1 cap with strain relief instead of caps bottom, 1 continuous cable duct on one side with a strain relief, several cable ducts and strain reliefs on the other side (depending on length) including mounting hardware

ITD extrusion “Economy”

1

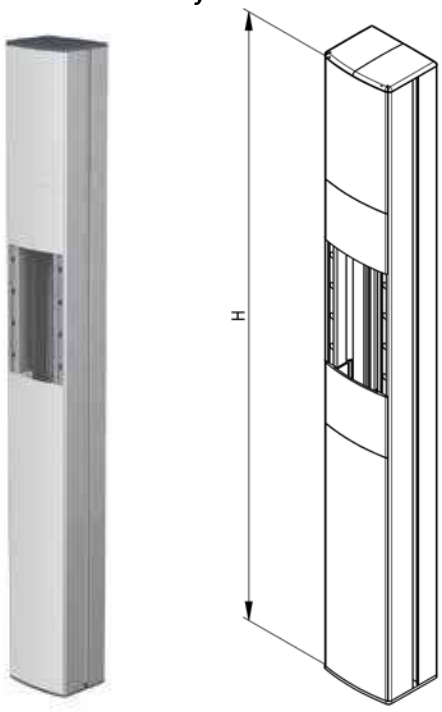

ITD extrusion “Profi”

2

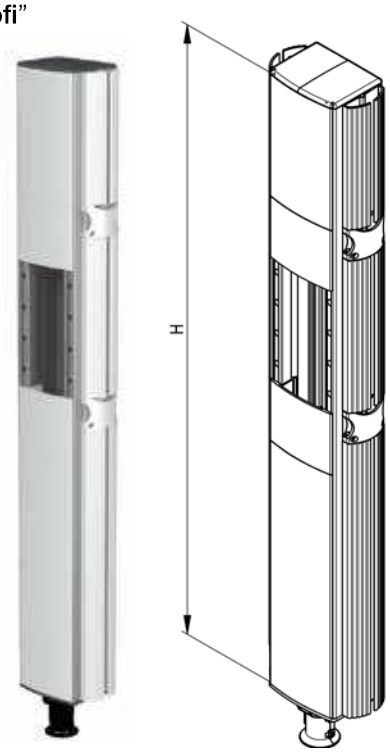

ITD extrusion “Economy” and “Profi”

Installation height H (in units U)	Installation height H (in mm)	Load capacity	Item number 1 “Economy”	Item number 2 “Profi”
10 U [1]	320 mm	35 kg / 77 lbs	**TS.6040.991**	**TS.6006.991**
15 U [1]	480 mm	50 kg / 110 lbs	**TS.6046.991**	**TS.6008.991**
20 U [1]	640 mm	50 kg / 110 lbs	**TS.6041.991**	**TS.6001.991**
30 U [1]	960 mm	100 kg / 220 lbs	**TS.6042.991**	**TS.6002.991**
40 U [1]	1280 mm	125 kg / 275 lbs	**TS.6043.991**	**TS.6003.991**
50 U [1]	1600 mm	150 kg / 330 lbs	**TS.6044.991**	**TS.6004.991**
60 U [1]	1920 mm	150 kg / 330 lbs	**TS.6045.991**	**TS.6005.991**

[1] 1U = 32 mm

ITD SUPPORT EXTRUSION

ITD support extrusion, flat

Features support extrusion:

- Accomodates support arms and various accessories almost directly to the wall
- A cable channel (inside) allows the accommodation of diverse data cables
- Installation directly on the wall

Installation:	On the wall
Finish:	ITD support extrusion: aluminium, natural anodized, Caps (top / bottom): RAL 7016 anthracite, Cover strips: RAL 7035 light grey
Scope of delivery:	ITD support extrusion, flat, with 2 tapped strips, 2 caps, cover strips (depending on length) including mounting hardware

ITD extrusion, flat

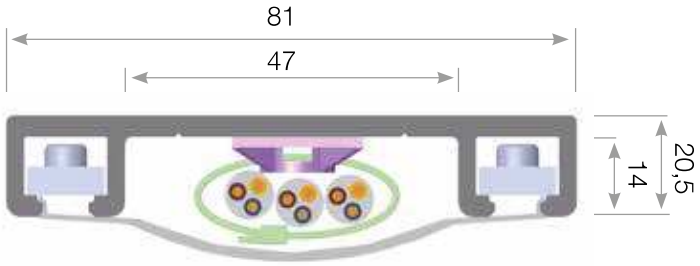

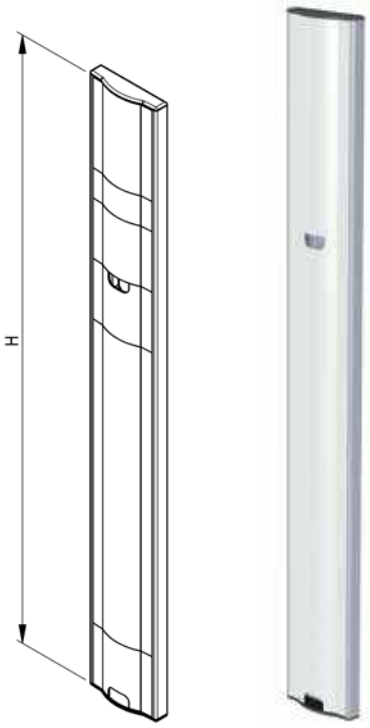

ITD extrusion, flat

Installation height H (in units U)	Installation height H (in mm)	Load capacity	Item number
10 U [1]	320 mm	25 kg / 55 lbs	**TS.6440.991**
15 U [1]	480 mm	50 kg / 110 lbs	**TS.6446.991**
20 U [1]	640 mm	50 kg / 110 lbs	**TS.6441.991**
30 U [1]	960 mm	75 kg / 165 lbs	**TS.6442.991**
40 U [1]	1280 mm	75 kg / 165 lbs	**TS.6443.991**
50 U [1]	1600 mm	100 kg / 220 lbs	**TS.6444.991**
60 U [1]	1920 mm	100 kg / 220 lbs	**TS.6445.991**

[1] 1U = 32 mm

MOUNTING ACCESSORIES

Mounting kit for ITD support extrusion “Economy” and “Profi”

Features mounting kit:

- Used to attach the support extrusion to the existing standard runners
- Applicative for ITD support extrusions “Economy” and “Profi”

Installation:

1 on two standard runners positioned one above the other with the same wall gap

2 to a standard runner and supply duct (with different wall gap)

3 to two standard runners positioned one above the other with option of bridging the supply duct

Finish: RAL 7035 light grey powder-coated

Scope of delivery: 2 adapters (depends on model) including mounting hardware

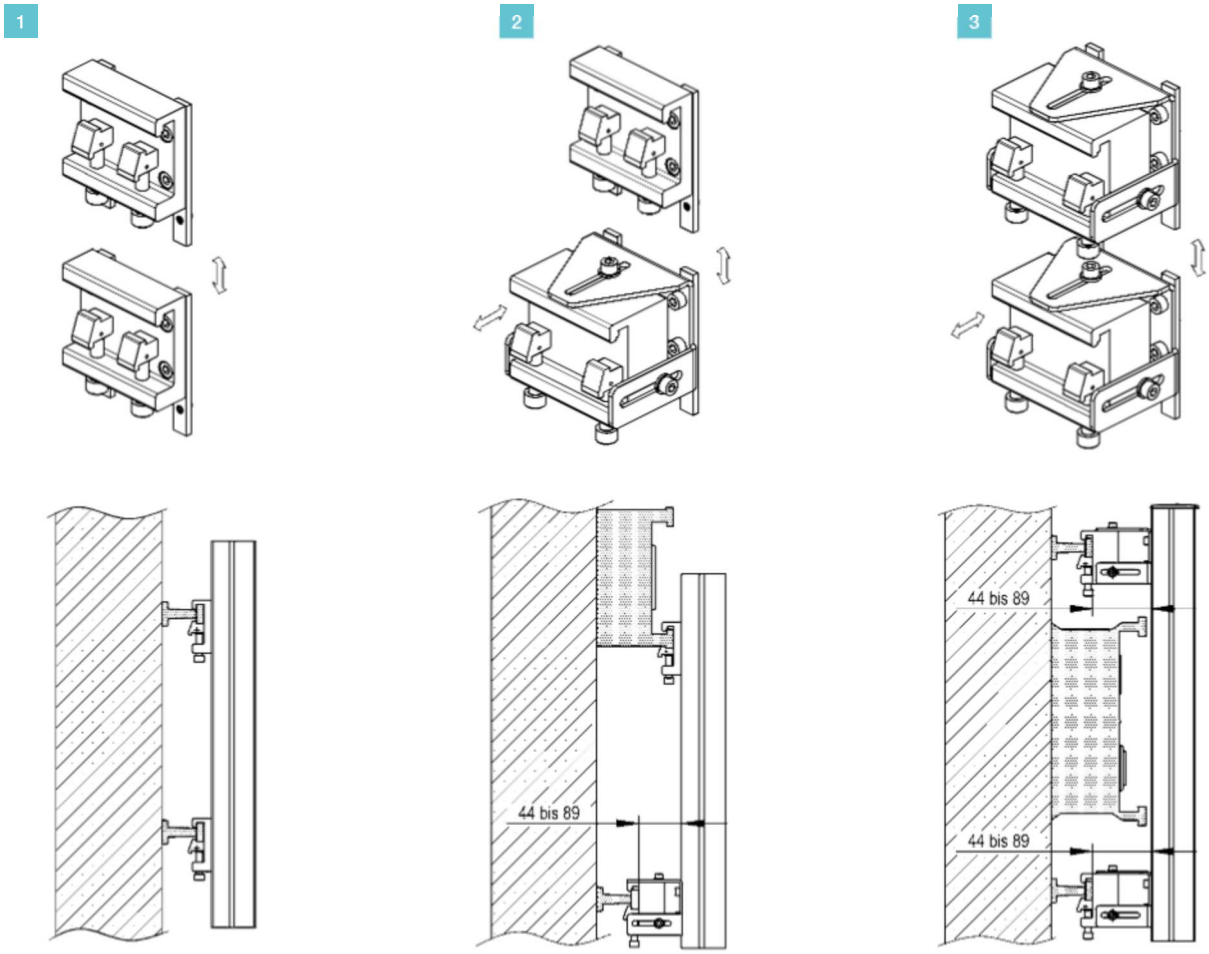

Mounting kit

Models	Item number
1 Mounting kit	TS.6011.991
2 Mounting kit with one spacer	TS.6012.991
3 Mounting kit with two spacers	TS.6013.991

BENCH SUPPORT

Bench support

Features bench support:

- Accomodates various support arms and monitor holders

Installation:	Mounted to the drilled worktop or shelf with the screws and the counter plate supplied
Load capacity:	up to 30 kg / 66 lbs
Installation height:	10 U (320 mm)
Finish:	RAL 7035 light grey powder-coated
Scope of delivery:	1 bench support with tapped strips, 1 cap and cover strip including mounting hardware

Bench support

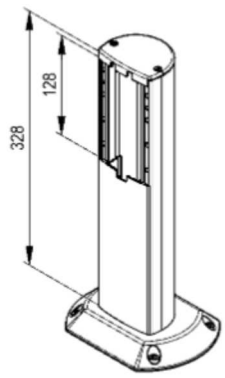

Application

Bench support

	Item number
Bench support, 10 U (320 mm)	**TS.6020.991**

DESK ADAPTER

Desk adapter with VESA 75 / 100 adapter, universal adapter or Philips Table Top Mount adapter

Features desk adapter:

- Accommodates monitors with VESA 75 / 100 adapters or universal adapter or Philips monitors IntelliVue MP5-70 and MX400-800
- Tilt range of monitor holder ± 15° (individually adjustable by monitor weight) and swivel range ± 160°

Installation: Fixed to the drilled worktop or shelf using the screws supplied and a counter plate

Load capacity: Up to 14 kg / 30.8 lbs, 5 up to 20 kg / 44 lbs (Table Mount adapter up to 14 kg / 30.8 lbs)

Models:

1 Desk adapter with VESA 75 / 100 adapter, universal

2 Desk adapter mit VESA 75 / 100 adapter, adjustable

3 Desk adapter with universal adapter (manufacturer-specific adapter plates from page 79)

4 Desk adapter with Philips Table Top Mount adapter

5 Desk adapter with Philips Table Top Mount adapter and vertical holder

Finish: RAL 7035 light grey powder-coated 5 Support post: aluminium, natural anodized

Scope of delivery: 1 desk adapter with tilt-and swivel unit and monitor holder

4 5 without Philips Table Top Mount

At 2 plus vertical holder with a height of 128 mm

1 counter plate including mounting hardware

Desk adapter

Models	Item number
1 Desk adapter with VESA 75 / 100 adaption, universal	TS.6337.991
2 Desk adapter with VESA 75 / 100 adaption, adjustable	TS.6158.991
3 Desk adapter with universal adapter	TS.6360.991
4 Desk adapter with Table Top Mount adapter for Philips IntelliVue MP5-70 / MX400-800	TS.6025.991
5 Desk adapter with Table Top Mount adapter for Philips IntelliVue MP5-70 / MX400-800 on column with vertical holder	TS.6157.991

Desk adapter with VESA 75 / 100 adapter

1

2

Application

Desk adapter with universal adapter

3

Application

Desk adapter with Philips Table Top Mount adapter

4

5

Application

MONITOR HOLDER WITH VESA 75 / 100 ADAPTATION

Monitor holder with VESA 75 / 100 adaptation

Features monitor holder:
- Acceptance of monitors with VESA 75 / 100 adaptation
- Tilting of the monitor (upwards or downwards) with the same, low effort due to spring force assistance
- Can be tilted by ± 20° and swivelled by ± 20°

Technical data: From page 126
Installation height: 3 U (96 mm)
Finish: RAL 7035 light grey powder-coated
Scope of delivery: 1 monitor holder including mounting hardware

- VESA adaptation with rotation adjustment ± 5° on request

Monitor holder

Application

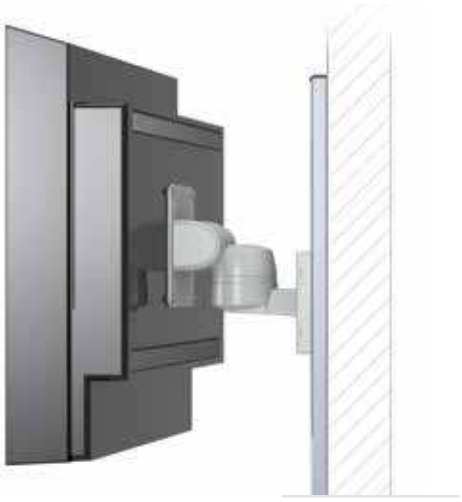

Installation

ITD extrusion

1

Standard runner
regular mounting

2

Standard runner
rapid mounting

Pole

Wall

Monitor holder

Installation	Item number Monitor weight 0-14 kg / 0-30.8 lbs	Item number Monitor weight 14-18 kg / 30.8-39.6 lbs
ITD extrusion	**TH.2002.991**	**TH.2003.991**
Standard runner, horizontal 1	**TH.2019.991**	**TH.2020.991**
Standard runner, horizontal 2	**TH.2017.991**	**TH.2018.991**
Pole Ø 35-38 mm	**TH.2004.991**	**TH.2005.991**
Wall	**TH.2000.991**	**TH.2001.991**

- The adapter for mounting on the vertical standard runner can be found on page 104

MONITOR HOLDER WITH VESA ADAPTATION

Monitor holder with VESA adaptation

Features monitor holder:

- Acceptance of monitors with:

1. VESA 75 / 100 adaptation, tilt range ± 15°, swivel range ± 25°
2. VESA 75 / 100 adaptation, rigid
3. VESA 100 / 200 / 300 adaptation, tilt range ± 20°, swivel range ± 80°
4. VESA 75 / 100 adaptation, tilt range ± 20°, rotation range ± 5°
5. VESA 75 / 100 adaptation, tilt range ± 20°, rotation range ± 5°
6. VESA 75 / 100 adaptation, tilt range ± 20°
7. VESA 75 / 100 adaptation, tilt range ± 20°

Technical data: From page 124
Installation height: 4 U (128 mm)
Finish: RAL 7035 light grey powder-coated
Scope of delivery: 1 monitor holder including mounting hardware

Monitor holder

Application

Monitor holder

Models / Installation	Monitor weight	Item number
1 ITD extrusion	0-14 kg / 0-30.8 lbs	**TS.6359.991**
2 ITD extrusion	0-18 kg / 0-39.6 lbs	**TS.6428.991**
3 ITD extrusion	14-18 kg / 30.8-39.6 lbs	**TS.6299.991**
4 ITD extrusion	0-14 kg / 0-30.8 lbs	**TS.6296.991**
5 ITD extrusion	14-18 kg / 30.8-39.6 lbs	**TS.6297.991**
6 ITD extrusion	0-14 kg / 0-30.8 lbs	**TS.6391.991**
7 ITD extrusion	14-18 kg / 30.8-39.6 lbs	**TS.6392.991**

- The adapter for mounting on the vertical standard runner can be found on page 104

MONITOR HOLDER WITH ANCHOR

Monitor holder with VESA adaptation or universal adapter on standard runner or on pole

Features anchor:
- Rotatable up to 90°
- For mounting and fastening medical equipment to standard runner (vertical / horizontal) and pole (Ø 25-42 mm)

Features monitor holder:
- Connected to anchor by short support arm (lenght 48 mm)
- Can be tilted by ± 15° (individually adjustable by monitor weight) and swivel by ± 80°
- Depending on model with VESA 75 / 100 adaptation or universal adapter

Finish:	Monitor holder: RAL 7035 light grey powder-coated; anchor: anodized
Load capacity:	Monitor holder: 5 kg / 11 lbs
Scope of delivery:	1 monitor holder with VESA 75 / 100 adaptation or universal adapter on anchor including mounting hardware

Monitor holder with VESA 75 / 100 adaptation

Application

Monitor holder with universal adapter

Application

Monitor holder	
Models	**Item number**
Monitor holder with VESA 75 / 100 on anchor, rotatable	**TS.6294.991**
Monitor holder with universal adapter on anchor, rotatable	**TS.6293.991**

ADAPTER PLATES

Adapter plates for monitor holders

Features adapter plates:
- The monitor-specific adapter plates are bolted down with the monitor
- Stop bolts on the support arm of the attached monitor holder secure everything in place

Material:	Aluminium
Load capacity:	up to 14 kg / 30.8 lbs
Finish:	anodized
Scope of delivery:	1 adapter plate including mounting hardware

Adapter plates for universal adapter

1

2
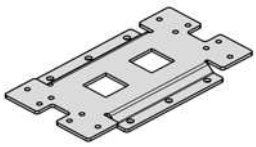

3
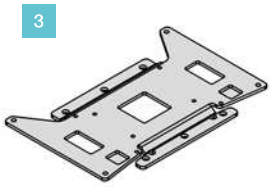

4
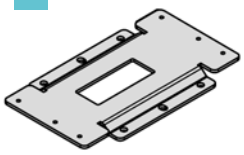

5
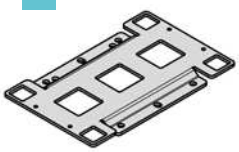

6
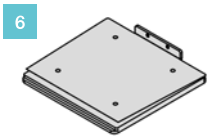

7
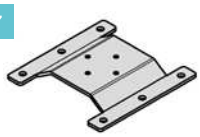

8
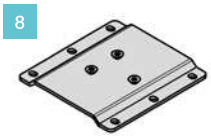

9
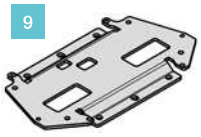

Application

Adapter plate for VESA 75 / 100

10
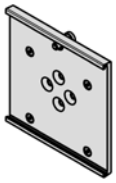

Application

Monitor manufacturer	Type of monitor	Dimensions (W x D)	Item number
Adapter plates for universal adapter			
1 GE	Critikon Pro 100 / Dash / Datex Ohmeda	140 mm x 122 mm	**TS.0305.999**
2 Mindray	BeneView T5 / T8 / PM-9000	215 mm x 122 mm	**TS.0657.999**
3 Nihon Kohden	Life Scope L / TR / PVM	214 mm x 122 mm	**TS.0576.999**
4 Nihon Kohden	Life Scope VS / BSM	205 mm x 122 mm	**TS.0670.999**
5 Nihon Kohden	SVM 7501 / 7503 / 7521 / 7523	200 mm x 122 mm	**TS.0892.999**
6 Schiller	Argus LCM / LCX	122 mm x 122 mm	**TS.0360.999**
7 Philips	Efficia CM 100/120/150, SureSigns VM1-VM8	126 mm x 122 mm	**TS.0469.999**
8 Philips	Slide In for IntelliVue MX 400-800	126 mm x 122 mm	**TS.0822.999**
9 Fukuda Denshi	DS-7000 / 7100 / 7200 / 8100 / 8200	220 mm x 122 mm	**TS.0865.999**
Adapter plate for VESA 75 / 100			
10 Spacelabs	SL 2600	127 mm x 127 mm	**TS.0824.999**

- Other adapter plates on request

BED MOUNT

Bed mount with universal holder or for Philips Table Top Mount adapter

Features bed mount:

- For mounting manufacturer-specific monitors using an adapter plate: see page 85
- For mounting of Philips MP5-30, MX400-550 and MP2/X2 (optionally with battery extension)
- For installation on the bed frame or on the standard runner

Load capacity: up to max. 15 kg / 33 lbs.
Finish: RAL 7035 light grey powder-coated
Scope of delivery: 1 bed mount

Bed mount with universal holder

1

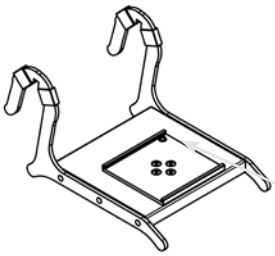

2

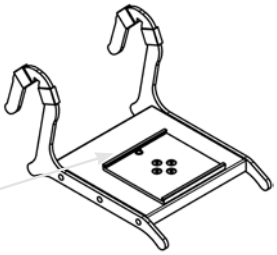

Locking pin

Application

Bed mount for Table Top Mount adapter

3

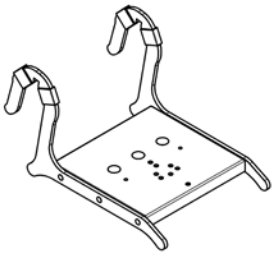

Application

Bed mount

Models	Item number
1 Bed mount with locking pin for fixing the monitor adapter 1 panel (side)	TS.6385.991
2 Bed mount with locking pin for fixing the monitor adapter panel (centre)	TS.6386.991
3 Bed mount for Table Top Mount-Adapter for fixing Philips monitors	TS.6384.991

BED MOUNT / POWER PACK HOLDER FOR PHILIPS MP2 / X2

Bed mount for Philips IntelliVue MP2 / X2

Features bed mount:
- For mounting of Philips IntelliVue MP2 / X2
- For installation on the bed frame or on the standard runner

Load capacity: up to max. 10 kg / 22 lbs
Finish: RAL 7035 light grey powder-coated
Scope of delivery 1 bed mount including mounting hardware

Bed mount for Philips IntelliVue MP2 / X2

Application

Bed mount

	Item number
Bed mount for Philips IntelliVue MP2 / X2	**TS.6281.991**

Power pack holder for bed mount for Philips IntelliVue MP2 / X2

Features power pack holder:
- For installation of the power pack on bed mount for Philips IntelliVue MP2 / X2

Load capacity: up to 3 kg / 6.6 lbs
Finish: RAL 7035 light grey powder-coated
Scope of delivery: 1 power pack holder including mounting hardware

Power pack holder for bed mount

Power pack holder

	Item number
Power pack holder for bed mount (Philips IntelliVue MP2 / X2 monitors)	**TS.0659.991**

KEYBOARD HOLDERS

Keyboard holder

Features keyboard holder:

- They can accommodate keyboards of different sizes and permit ergonomic and user-friendly operation
- The mousepad slides out on both sides
- The powder-coated surface is easy to clean and is resistant to cleaning agents and disinfectants)

Models:

1 Keyboard holder with **mf-port** support arm, rigid, on ITD extrusion
2 Keyboard holder with **mf-port** pivot arm, single, on ITD extrusion
3 Keyboard holder with **mf-port** pivot arm, double, on ITD extrusion

Load capacity: Keyboard holder: up to 5 kg /11 lbs (distributed load)
Installation height: 4 U (128 mm)
Finish: RAL 7035 light grey powder-coated
Scope of delivery: 1 keyboard holder with support arm including mounting hardware

Keyboard holders

Models	Item number
1 Keyboard holder with **mf-port** support arm, rigid, on ITD extrusion	**RS.4385.991**
2 Keyboard holder with **mf-port** pivot arm, single, on ITD extrusion	**TS.6342.991**
3 Keyboard holder with **mf-port** pivot arm, double, on ITD extrusion	**TS.6343.991**

- The mounting kit for support arms on equipment carts can be found on page 103

Keyboard holder with **mf-port** support arm, rigid

1

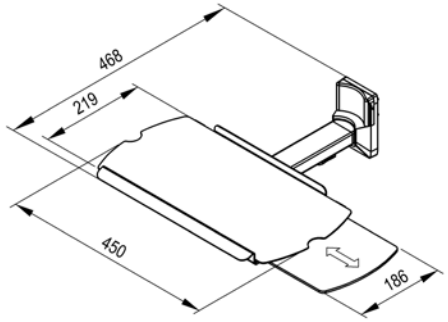

Application

Keyboard holder with **mf-port** pivot arm, single

2

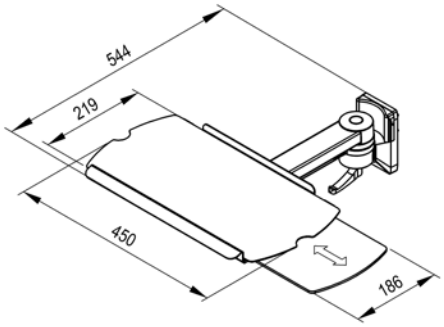

Application

Keyboard holder with **mf-port** pivot arm, double

3

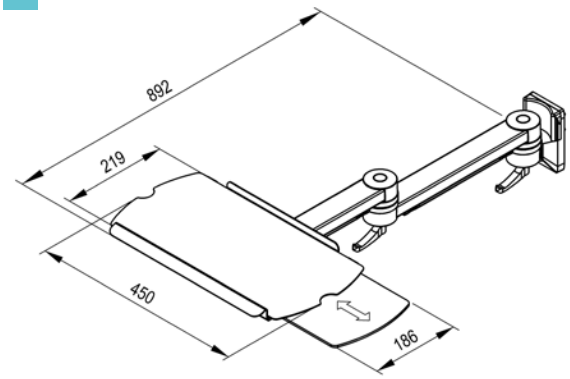

Application

KEYBOARD HOLDERS

Keyboard holders

Features keyboard holder:
- They can accommodate keyboards of different sizes and permit ergonomic and user-friendly operation
- The mousepad slides out on both sides
- The powder-coated surface is easy to clean and is resistant to cleaning agents and disinfectants

Models:
1 Keyboard holder, fold-away, on ITD extrusion
2 Keyboard holder, pull-out, on ITD extrusion
3 Keyboard holder for variable height support arm **flexion-port** with Table Top Mount adapter for Philips IntelliVue MX600-800

Dimensions: 2 Depth in closed position: 383 mm / depth in extended position: 540 mm
Load capacity: Keyboard holder: up to 5 kg /11 lbs (distributed load)
Installation height: 4 U (128 mm)
Finish: RAL 7035 light grey powder-coated
Scope of delivery: 1 keyboard holder including mounting hardware

Keyboard holders

Models	Item number
1 Keyboard holder, fold-away	TS.6084.991
2 Keyboard holder, pull-out	TS.6247.991
3 Keyboard holder for variable height support arm **flexion-port** (Philips IntelliVue MX600-800)	HA.1024.991

- The mounting kit for support arms on equipment carts can be found on page 103

Mouse holder

Features mouse holder:
- Comfortable accommodation of the mouse
- Saves place while keeping the mouse secure
- Attaches with adhesive back tape

Material: plastic
Finish: RAL 7035 light grey
Scope of delivery: 1 mouse holder including tape

Mouse holder

	Item number
Mouse holder	ZV.9295.999

Keyboard holder, fold-away

1

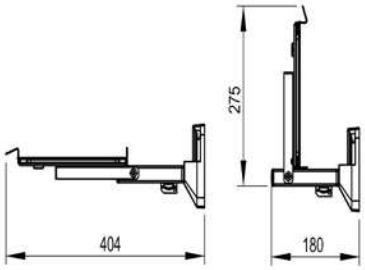

Application

Keyboard holder, pull-out

2

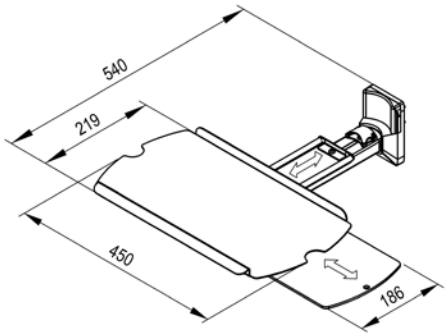

Application

Keyboard holder for **flexion-port**

3

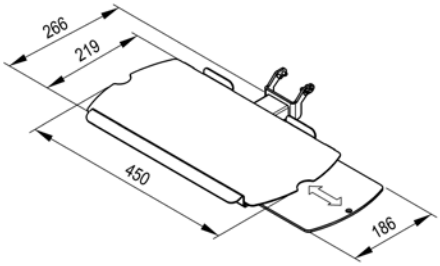

Application

Mouse holder

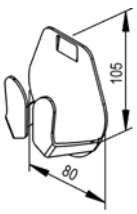

Application

SHELVES

Shelves

Features shelf:

- The continuous raised edge provides a secure platform for valuable medical equipment
- The rounded corners protect users from injuries
- The corners and handles are important design elements offering a choice of colour [1]. They play a key role in defining the CI of the customer
- The powder-coated surface is easy to clean and is resistant to cleaning agents and disinfectants

Models:

1 Shelf on horizontal standard runner
2 Shelf on ITD extrusion
3 Shelf, pivotable, with **mf-port** support arm, rigid, on ITD extrusion
4 Shelf, pivotable, with **mf-port** pivot arm, single, on ITD extrusion
5 Shelf, pivotable, with **mf-port** pivot arm, double, on ITD extrusion

Load capacity: Shelves: 1 2 up to 10 kg / 22 lbs (distributed load) / 3 4 5 up tp 15 kg / 33 lbs (distributed load)
Support arm, rigid: up to 23 kg / 50.7 lbs
Pivot arm, single: up to 23 kg / 50.7 lbs
Pivot arm, double: up tp 15 kg / 33 lbs

Finish: RAL 7035 light grey powder-coated

Installation height: 2 3 U (96 mm)
3 4 5 4 U (128 mm)

Decorative trims: See [1]

Scope of delivery: 1 shelf with bracket including mounting hardware

Shelves

Models	Dimensions (W x D)	Item number
1 Shelf on horizontal standard runner	400 mm x 360 mm	**MZ.0004.XXX** [1]
2 Shelf on ITD extrusion (without picture)	400 mm x 360 mm	**RS.4360.XXX** [1]
	400 mm x 491 mm	**TS.6276.XXX** [1]
3 Shelf, pivotable, with **mf-port** support arm, rigid, on ITD extrusion	400 mm x 360 mm	**TS.6050.XXX** [1]
4 Shelf, pivotable, with **mf-port** pivot arm, single, on ITD extrusion	400 mm x 360 mm	**TS.6052.XXX** [1]
5 Shelf, pivotable, with **mf-port** pivot arm, double, on ITD extrusion	400 mm x 360 mm	**TS.6055.XXX** [1]

- Further adaptations e.g. on standard runner available on request

[1] Decorative trim: please replace .XXX by .901 = RAL 5021 water blue, .902 = RAL 5013 cobalt blue, .903 = RAL 7035 light grey

Shelf

1

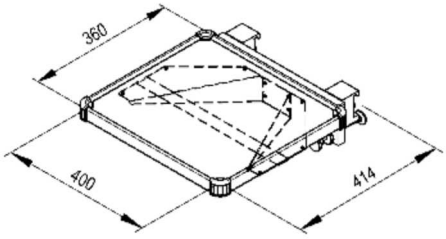

Application

Shelf, pivotable

3

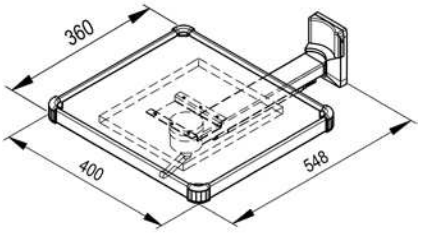

Application

4

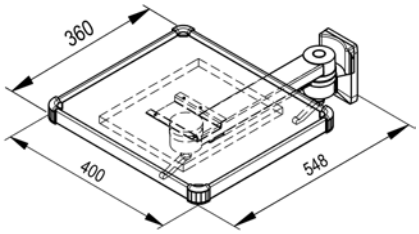

5

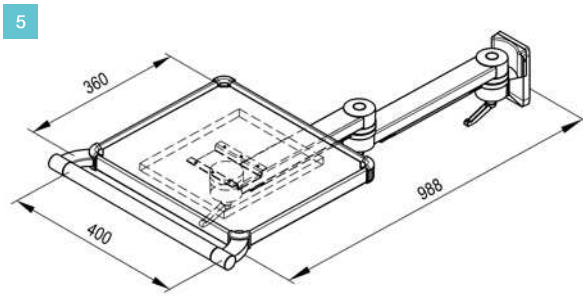

DRAWERS

Drawers

Features drawers:

- Roller-guided 3/4 slides guarantee easy-slide drawers
- The lift-out drawer unit makes cleaning easy
- Easy to clean and resistant to cleaning agents and disinfectants
- The top for the drawer is always a shelf. Users derive benefit from the continuous raised edges.
- The rounded edges protect against injury and provide an important design element for presenting the CI of the customer

Models:	1 Block of drawes on ITD extrusion
	2 Block of drawes, high, double
	3 Block of drawes on horizontal standard runner
Installation height:	1 6 U (192 mm)
	2 9 U (288 mm)
Load capacity:	Shelves: 1 3 up to 10 kg /22 lbs (distributed load), 2 up to 5 kg / 11 lbs (distributed load)
	Drawer: up to 3 kg / 6.6 lbs
Finish:	RAL 7035 light grey powder-coated
Decorative trims:	See [1]
Scope of delivery:	1 drawer including mounting hardware

Drawers

Models	Dimensions (W x D)	Item number
1 Block of drawers	400 mm x 360 mm	**RS.4363.XXX** [1]
	450 mm x 491 mm	**TS.6279.XXX** [1]
2 Block of drawers, high, double	400 mm x 360 mm	**RS.4389.XXX** [1]
3 Block of drawers on horizontal standard runner	400 mm x 366 mm	**MZ.6001.XXX** [1]

- Further adaptations e.g. on standard runner available on request

[1] Decorative trim: please replace .XXX by .901 = RAL 5021 water blue, .902 = RAL 5013 cobalt blue, .903 = RAL 7035 light grey

Block of drawers

1

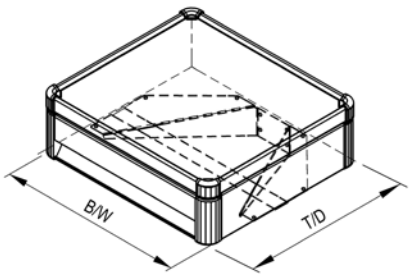

Application

Block of drawers, high, double

2

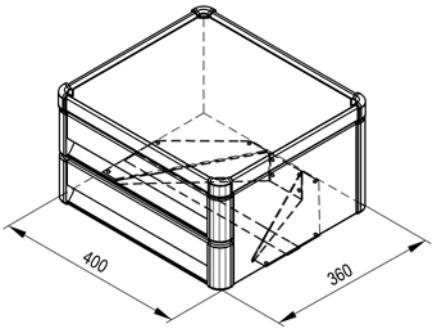

Application

Block of drawers on standard runner

3

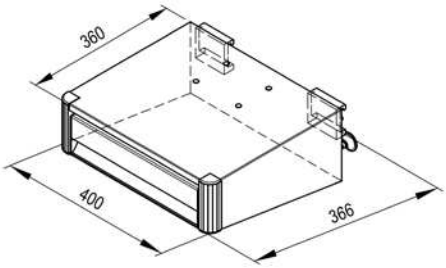

Application

LAPTOP HOLDER

Laptop holder with mousepad

Features laptop holder:

- Suitable for accommodating all standard commercial models
- Attached with velcro tape (length: 935 mm) and locked in place with two height adjustable holders
- The integrated mousepad slides out to a maximum of 230 mm on the right or left as required

Intallation:	Attached directly on ITD extrusion
Material:	Laptop holder: aluminium / steel, velcro tape: plastic
Installation height:	4 U (128 mm)
Load capacity:	10 kg / 22 lbs (distributed load)
Finish:	RAL 7035 light grey powder-coated
Scope of delivery:	1 laptop holder with mousepad including mounting hardware

Laptop holder

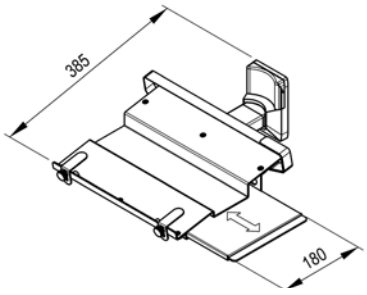

Application

Laptop holder

	Item number
Laptop holder with mousepad on ITD extrusion	**TS.6301.991**

- You can find a lockable version of the laptop holder in our catalogue “Mobile Equipment Carts”.

COMPUTER HOLDER

Computer holder

Features computer holder:

- The holders are dimensioned for computers in different sizes
- Two silicon belts guarantee individual adaptability and secure mounting and transporting for computers
- A special computer holder is available for Philips XDS

Intallation:	Attached directly on ITD extrusion
Material:	Computer holder: sheet steel, belts: silicon
Installation height:	Depends on computer size
Load capacity:	Computer holder, small: 5 kg / 11 lbs; computer holder, large: 20 kg / 44 lbs
Finish:	RAL 7035 light grey powder-coated
Scope of delivery:	1 computer holder with two silicon belts (L = 1000 mm) including mounting hardware

Computer holder, small / large

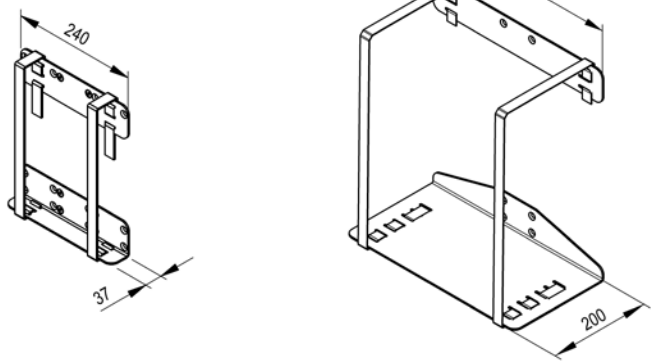

Application

Computer holder

Models	Item number
Computer holder, small	**TS.6144.991**
Computer holder, large	**TS.6146.991**

POWER PACK HOLDER

Power pack holder

Features power pack holder:

- Accommodates power packs with a maximum size of 250 mm
- Accommodates power packs with a maximum size of 420 mm

Installation:	It can be mounted vertically or horizontally to the ITD support extrusion and at the rear of the universal monitor bracket using VESA 75 / 100 adaptors
Material:	Sheet steel / Aluminium
Installation height:	Power pack holder, small: 5 U (160 mm) Power pack holder, large: 7 U (224 mm)
Load capacity:	Power pack holder, small: 3 kg / 6.6 lbs, Power pack holder, large: 5 kg / 11 lbs
Finish:	RAL 7035 light grey powder-coated
Scope of delivery:	1 power pack holder (small) with 2 cable ties (L = 340 mm) including mounting hardware 1 power pack holder (large) with 2 cable ties (L = 580 mm) including mounting hardware

Power pack holder, small

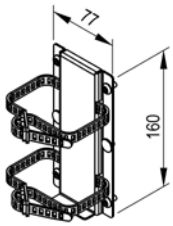

Application

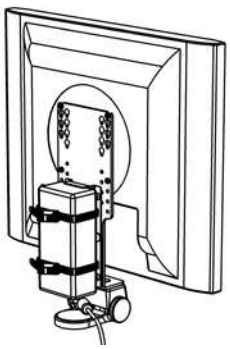

Power pack holder, large

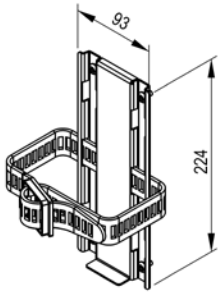

Application

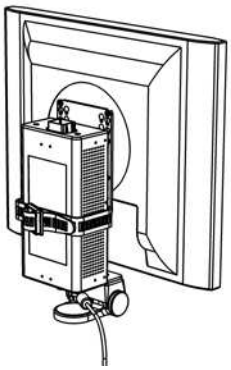

Power pack holder

Models	Item number
Power pack holder, small	**TS.0524.991**
Power pack holder, large	**TS.0574.991**

PUMP SUPPORT

Pump support

Features pump support, single:
- For accomodation of infusion and injection systems on a pole (Ø 28 mm)
- The fixing system using spring nuts and T-slots allows the relevant position to be adapted to the pump type

Features pump support, double:
- It is used to attach infusion and injection pumps on two poles (Ø 28 mm)

Installation:	Attached directly on ITD extrusion
Load capacity:	35 kg / 77 lbs
Finish:	RAL 7035 light grey powder-coated, support post: aluminium, natural anodized
Scope of delivery:	1 pump support including mounting hardware

Pump support, double

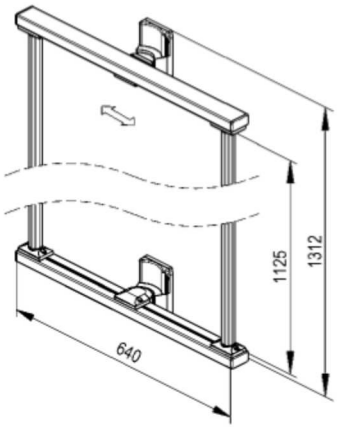

Pump support, single

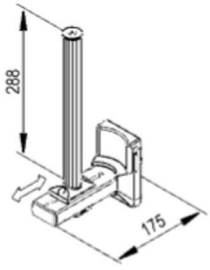

Application

Pump support

Models	Item number
Pump support, single	TS.6120.991
Pump support, double	TS.6128.991

ANCHOR

Anchor

Features anchor:
- It is used for mounting and fastening medical equipment to standard runner and pole

Models:
- Anchor, rigid, for accomodation on the standard runner
- Anchor, with rotation (by 90°), for Philips IntelliVue MP2 / X2 on standard runner / pole

Material:	Anchor: Aluminium Adapter plate (rotation unit): sheet steel
Load capacity:	5 kg / 11 lbs
Finish:	Anchor: anodized, adapter plate: RAL 7035 light grey powder-coated
Scope of delivery:	1 anchor including mounting hardware

Anchor, rigid

Application

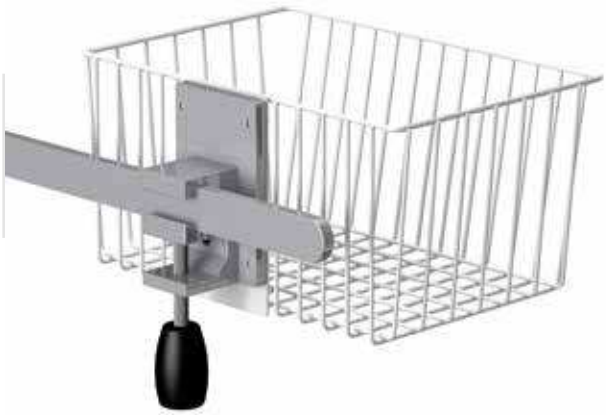

Anchor, rotatable

Application

Anchor

Models	Item number
Anchor, rigid	ZV.9820.799
Anchor, rotatable, (by 90°)	TS.6282.991

POST (“DOWN-POST”)

Post (“Down-Post”), fixed / pivotable

Features post:

- Posts are available in fixed or pivotable versions and in various lengths
- For mounting equipment with clamps (Ø 28 mm), e.g. infusion and injection pumps or external racks
- For installation on the support arm, pivot arm, variable height support arm

Models:

1 Adapter, fixed for **mf-port** rigid support arms or pivot arms, single or double, variable height support arm **flexion-port**

2 Adapter, pivotable, for **mf-port** rigid support arms or pivot arms, single or double, variable height support arm **flexion-port**

3 Adapter, pivotable, for pivot arms **rm-port**, single or double

Load capacity: 10 kg / 22 lbs

Finish: Adapter: RAL 7035 light grey powder-coated; support post: aluminium, anodized

Scope of delivery: 1 post (“Down-Post”) including mounting hardware

Post (“Down-Post”)

1 2

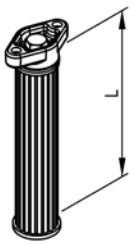

3

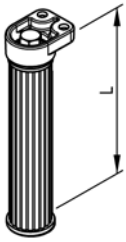

Application

Post (“Down-Post”)

Models	Length	Item number
1 Post (“Down-Post”), fixed	128 mm	**HA.1077.991**
	288 mm	**HA.1078.991**
2 Post (“Down-Post”), pivotable	128 mm	**HA.1005.991**
	288 mm	**HA.1034.991**
3 Post (“Down-Post”), pivotable for **rm-port**	128 mm	**TH.2006.991**
	288 mm	**TH.2007.991**

STORAGE BASKET

Storage basket

Features storage basket:
- Accomodates medical accessories

Installation:	1 On the vertical standard runner
	2 Directly on the ITD support extrusion
Material:	Steel wire
Mesh width:	Inside dimension 19 mm or 25 mm
Load capacity:	3 kg / 6.6 lbs (distributed load)
Installation height:	2 5 U (160 mm)
Finish:	RAL 9016 white, fluidized-bed coated
Scope of delivery:	1 storage basket including mounting hardware

Storage basket on standard runner

1

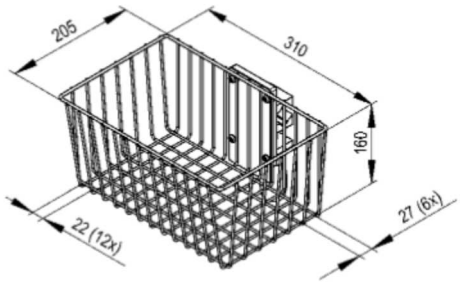

Application

Storage basket on ITD extrusion

2

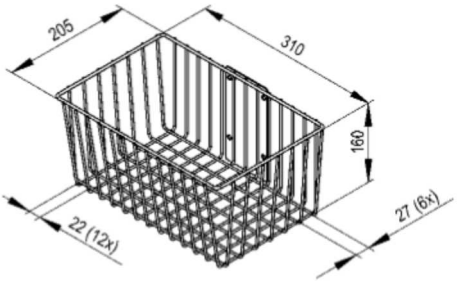

Application

Storage basket

Models	Item number
1 Storage basket on standard runner	ZV.9599.800
2 Storage basket on ITD extrusion	ZV.9967.800

STANDARD RUNNER / MOUNTING KIT

Standard runner (10 mm x 25 mm)

Features standard runner:
- Accomodates medical accessories

Installation:	Directly on the ITD support extrusion
Material:	Stainless steel
Dimensions:	10 mm x 25 mm
Installation height:	1 U (32 mm)
Load capacity:	10 kg / 22 lbs (distributed load)
Scope of delivery:	1 standard runner with adapter and mounting hardware

Standard runner

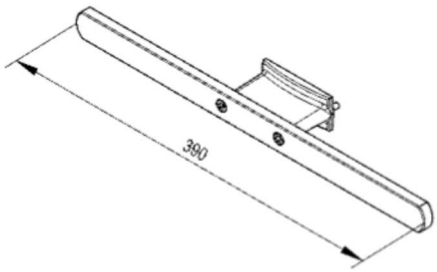

Application

Standard runner

	Item number
Standard runner	**RS.0076.991**

Mounting kit for rigid and pivot arms on mobile equipment carts

Features mounting kit:
- For installation of different support arms with ITD adapter plate at ITD mobile equipment carts **classic-cart** and **compact-cart**

Finish:	Zinced
Scope of delivery:	2 tapped strips including mounting hardware

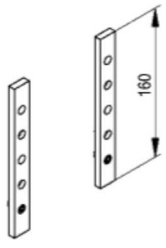

Mounting kit

	Item number
Mounting kit for installation support (pivot and ridig) arms at ITD mobile carts	**ZV.9731.999**

ADAPTER FOR VERTICAL STANDARD RUNNER

Adapter for vertical standard runner

Features adapter:
For the installation of each support arm with ITD support plates on a vertical standard runner

Models:
1 Adapter for variable height support arm **flexion-port**
2 Adapter for pivot arms **rm-port** and **lf-port**
3 Adapter for rigid support arms or pivot arms, single or double, **mf-port**

Load capacity: 20 kg / 44 lbs

Installation height:
1 5 U (160 mm)
2 3 U (96 mm)
3 4 U (128 mm)

Finish: aluminium, anodized

Scope of delivery: 1 adapter including mounting hardware

Adapter

1 2 3

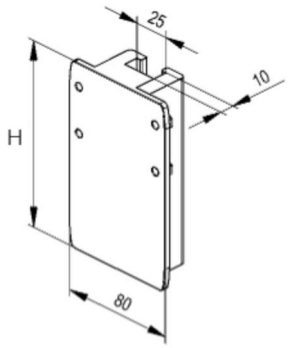

Application

Adapter for vertical standard runner

Models	Item number
1 Adapter for vertical standard runner (**flexion-port**)	HA.1035.999
2 Adapter for vertical standard runner (**rm-port**, **lf-port**)	TH.2010.999
3 Adapter for vertical standard runner (**mf-port**)	TS.0213.999

HANDLE

Handle for mounting with VESA 75 / 100 adaptation

Features handle:

- Specially designed for monitor holders with VESA 75 / 100 adaption (with spring force assistance)
- Could be installed afterwards
- Due to its height variability the application and optimal ergonomic positioning is possible for monitors of varying sizes and allows ergonomic positioning

Material: Steel plate
Finish: RAL 7035 light grey powder-coated
Scope of delivery: 1 handle including mounting hardware

Handle for VESA 75 / 100

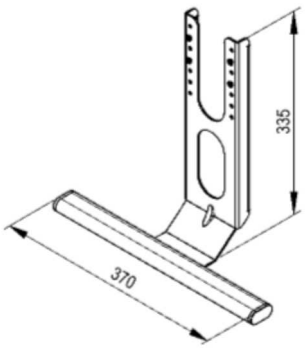

Application

Handle	
	Item number
Handle for mounting with VESA 75 / 100 adaptation	**TS.0808.991**

CABLE HOOK / PROTECTIVE COVER

Cable hook

Features cable hook:
- Cable hook for routing of different cables
- Cable hook can be installed afterwards

Material: 1 2 3 plastic
4 steel plate
Finish: RAL 7035 light grey
Scope of delivery: 1 cable hook including mounting hardware

Cable hook

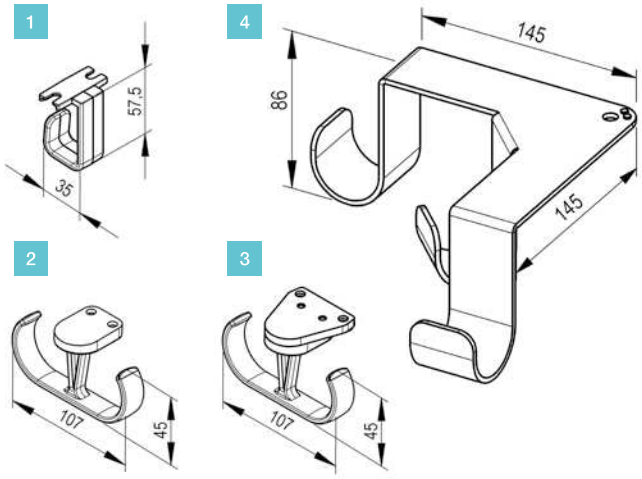

Application

Cable hook

Models	Item number
1 Cable hook, single (**mf-port**)	TS.0197.991
2 Cable hook, double (**rm-port**)	TH.2008.991
3 Cable hook, double (**flexion-port**)	HA.1105.991
4 Cable hook for post “Down-Post” (**rm-port**, **mf-port**, **flexion-port**)	TS.0872.991

Protective cover with closure system for cable (flexion-port)

Features protective cover:
- It serves the protection and hygiene of the outgoing cables (cable volume: Ø 25 mm)
- A secure closure system allows quick cleaning or addition of the cables

Material: Quality PVC
Dimensions: 2 meters for **flexion-port** with lenghts 300, 400 und 600
3 meters für **flexion-port** with lenghts 300 and 400 on pivot arm
Scope of delivery: 1 protective cover with closure system

Protective cover

Models	Item number
Protective cover with closure system for cable (2 m)	ZV.9557.999
Protective cover with closure system for cable (3 m)	ZV.9558.999

SOCKET STRIPS

Socket strips

Features socket strips:

- Earthed and EURO socket strips with illuminated switch – depending on the version
- The socket strips are in conformity with the relevant DIN, EN and IEC standards
- A robust metal design meets the toughest mechanical requirements
- The sockets for the socket strips are also inclined at 45°, allowing right-angled plugs to be optimally positioned
- The plastic covers are fire-resistant and self-extinguishing in conformity with the UL standard
- The connecting cables for the earthed socket strips end in a junction box

Models:

1 EURO socket strips, 3-way, with switch
2 Earthed socket strips, 4-way, without switch
3 Earthed socket strips, 3-way, with switch and external earth connection cable

Socket strips **Application**

1

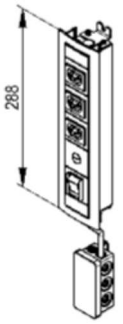

2

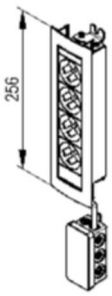

3

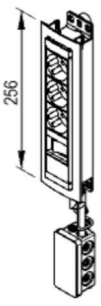

Socket strips

Models	Rated value	Standard	Item number
1 EURO socket strips, 3-way, with switch	10 A / 250 VAC	IEC 320	ZV.9639.991
2 Earthed socket strips, 4-way, without switch	16 A / 250 VAC	CEE7/III	ZV.9669.991
3 Earthed socket strips, 3-way, with switch	16 A / 250 VAC	CEE7/III	ZV.9640.991

EQUIPOTENTIAL PLUG

Equipotential plug

Features equipotential plug:
- It is used to avoid potential differences

Material: Brass nickel-plated / sheet steel
Installation height: 2 U (64 mm)
Scope of delivery: 4 equipotential plugs with colour marking disc (yellow / green) and mounting bracket including mounting hardware

Equipotential plug

	Item number
Equipotential plug	**RS.0125.991**

Equipotential cable

Features equipotential cable:
- It is used to connect installed units with the equipotential plug
- Very flexible cable 6 mm² with green and yellow PVC insulation; provided with the inclined equipotential socket KBT6 DIN on both sides

Material: Equipotential socket: Brass nickel-plated, cable: copper
Scope of delivery: 1 cable with inclined socket on both sides

Equipotential cable

Models	Length	Item number
Equipotential cable	0,3 m	**ZV.9941.999**
Equipotential cable	0,5 m	**ZV.9942.999**
Equipotential cable	1,0 m	**ZV.9943.999**
Equipotential cable	1,5 m	**ZV.9488.999**
Equipotential cable	5,0 m	**ZV.9944.999**

CARRIER SYSTEMS

Carrier support system for Philips XDS

Features carrier support system:
- For accomodation of monitor holders for Philips XDS, monitors with VESA 75 / 100 adapter (± 25° pivoted and ± 15° inclinable), as well as Philips MP2 / X2 monitors over an additional support arm
- A keyboard holder is available as optional feature
- The earthed socket strip enables to attach 3 devices

Material: Aluminium / sheet steel / plastic

Load capacity:
- Monitor holder with VESA 75 / 100 adaptation universal: up to 14 kg / 30.8 lbs
- Computer holder (XDS): up to 5 kg / 11 lbs
- Monitor holder for MP2 / X2: up to 5 kg / 11 lbs
- Power pack holder MP2 / X2: up to 5 kg / 11 lbs

Finish: RAL 7035 light grey powder-coated

Scope of delivery:
- 1 support extrusion 40 U (1280 mm) with cable ducts and strain reliefs
- 1 monitor holder, universal, with VESA 75 / 100 adapter
- 1 computer holder (XDS)
- 1 earthed socket strip, 3-way, with switch
- 1 support arm with holder for Philips MP2 / X2 monitor
- Mounting hardware

Supplied pre-assembled

Carrier support system	
	Item number
Carrier support system for Philips XDS	**TS.9046.991**

CARRIER SYSTEMS

Carrier system with mechanical height adjustment

Features carrier support system:
- It provides an ergonomically correct operational position at all times with mechanical height adjustment
- Height adjustment is operated in an adjustment range of 300 mm
- The fold-up keyboard and screen can be moved as a unit and can be fixed in place with a clamp lever mounted as an attachment
- The monitor holder is ± 25° pivoted and ± 15° tiltable

Material: Aluminium / sheet steel / plastic

Load capacity:
- Monitor holder with VESA 75 / 100 universal: up to 14 kg / 30.8 lbs
- Computer holder: up to 5 kg / 11 lbs
- Keyboard holder: up to 5 kg / 11 lbs (distributed load)

Finish:
- RAL 7035 light grey powder-coated
- Support extrusion: anodized

Scope of delivery:
- 1 support extrusion 60 U (1920 mm) with cable ducts on both sides
- 1 mechanical height adjustment
- 1 computer holder
- 1 keyboard holder, fold-away, with pull-out mousepad
- 1 mouse holder
- 1 monitor holder with tilt and swivel unit and VESA 75 / 100 adapter (depends on the load capacity of the height adjustment)
- 1 EURO socket strip, 3-way, with switch
- Mounting hardware

Supplied pre-assembled

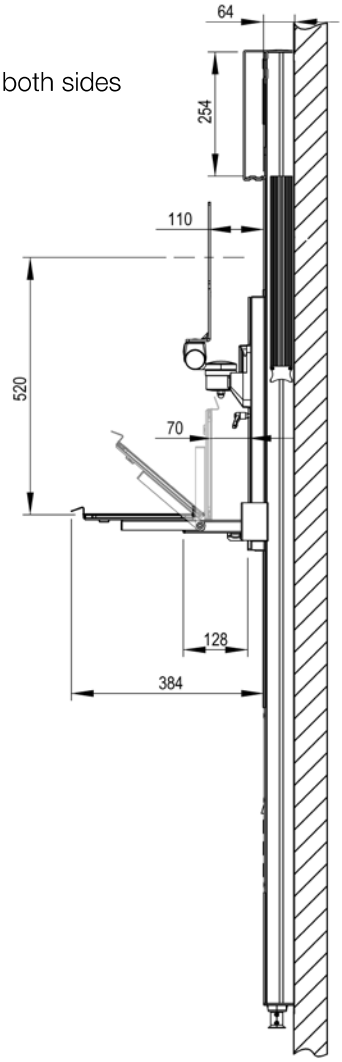

Carrier systems

Models	Load capacity (height adjustment)	Item number
Carrier system with mechanical height adjustment	3-10 kg / 6.6-22 lbs	**TS.9040.991**
Carrier system with mechanical height adjustment	8-16 kg / 17.6-35.2 lbs	**TS.9041.991**

CARRIER SYSTEMS

Carrier system with electrical height adjustment

Features carrier support system:
- It provides an ergonomically correct operational position with electrical height adjustment all the time
- The fold-up keyboard and screen can be moved as a unit
- Height adjustment (adjustment range: 300 mm) is operated using a remote control which is attached to the key-board holder (with pull-out mousepad and mouse garage) to save space
- The monitor holder is ± 25° pivoted and ± 15° tiltable

Material: Aluminium / sheet steel / plastic

Load capacity:
- Monitor holder with VESA 75 / 100 universal: up to 14 kg / 30.8 lbs
- Computer holder: up to 5 kg / 11 lbs
- Keyboard holder: up to 5 kg / 11 lbs (distributed load)

Finish:
- RAL 7035 light grey powder-coated
- Support extrusion: anodized

Scope of delivery:
- 1 support extrusion 60 U (1920 mm) with cable ducts on both sides
- 1 electrical height adjustment
- 1 computer holder: up to 5 kg / 11 lbs
- 1 keyboard holder, fold-away, with pull-out mousepad (left / right)
- 1 mouse holder
- 1 monitor holder with tilt and swivel unit and VESA 75 / 100 adapter
- 1 EURO socket strip, 3-way, with switch
- Mounting hardware

Supplied pre-assembled

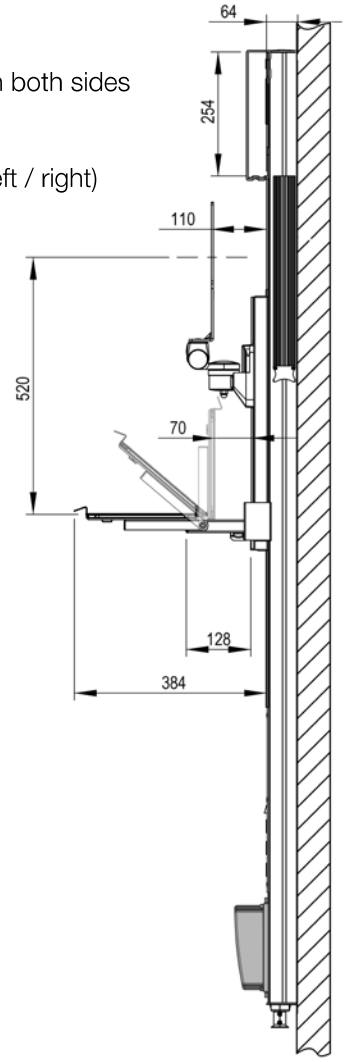

Carrier systems	Load capacity (height adjustment)	Item number
Carrier system with electrical height adjustment	20 kg / 44 lbs	**TS.9028.991**